P226. Lecture 5. 4/16/2019

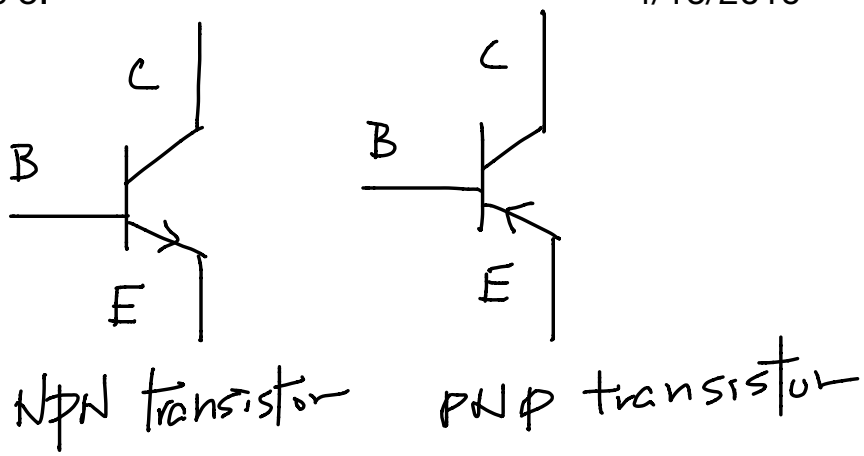

Transistor (transconductance resistor) is a three terminal device to switch or amplifier signals.

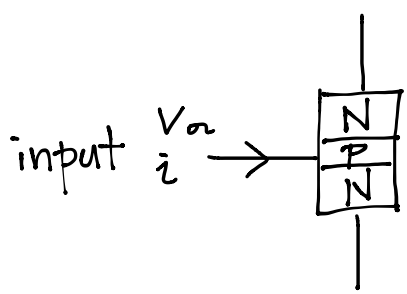

Idea:

Electronically control the main circuit

Voltage mode: high V: R=0 ⇒ on

Low V: R=∞ ⇒ off

Current mode: small current induces big current.

When the transitor is on

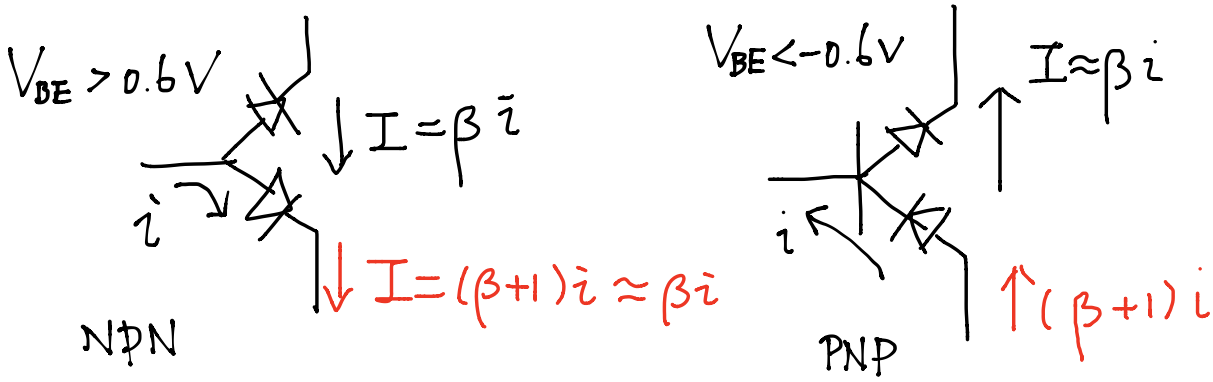

Rules for NPN transistor

1. Collector is more positive than Emitter.
2. Base-emitter and base-collector are effectively diodes.
3. I_collector = beta I_beta. Beta can be as high as 60-100
4. Constraints: I_base, I_collector and V_ce should not be too high. Typically I_collector < 0.1~1 A and V_ce < 15~40V.

Model of a NPN transistor:

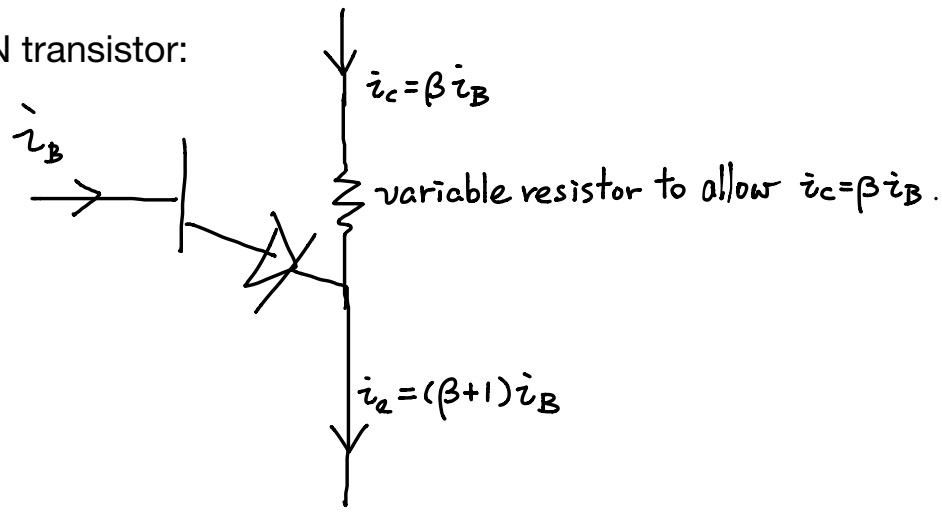

Applications:

1. Switch

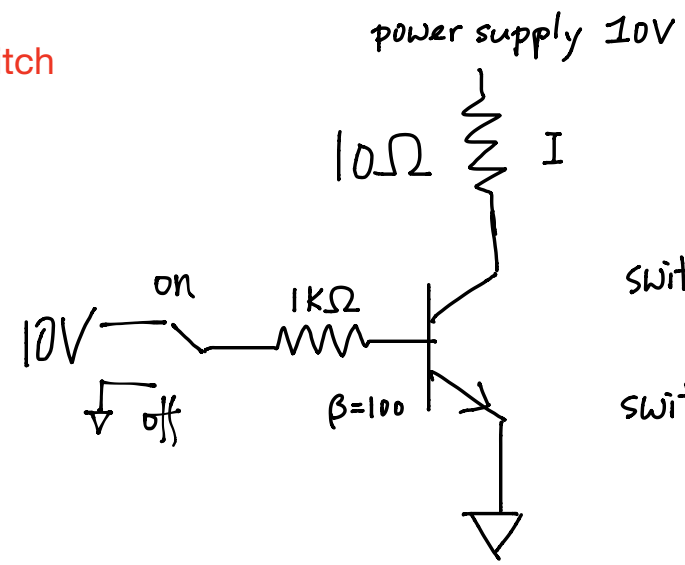

switch on: I = 940mA
Why?

switch off: I = 0

Emitter follower: emitter follows the input (base), less one diode drop, with a factor of beta lower output impedance or higher input impedance:

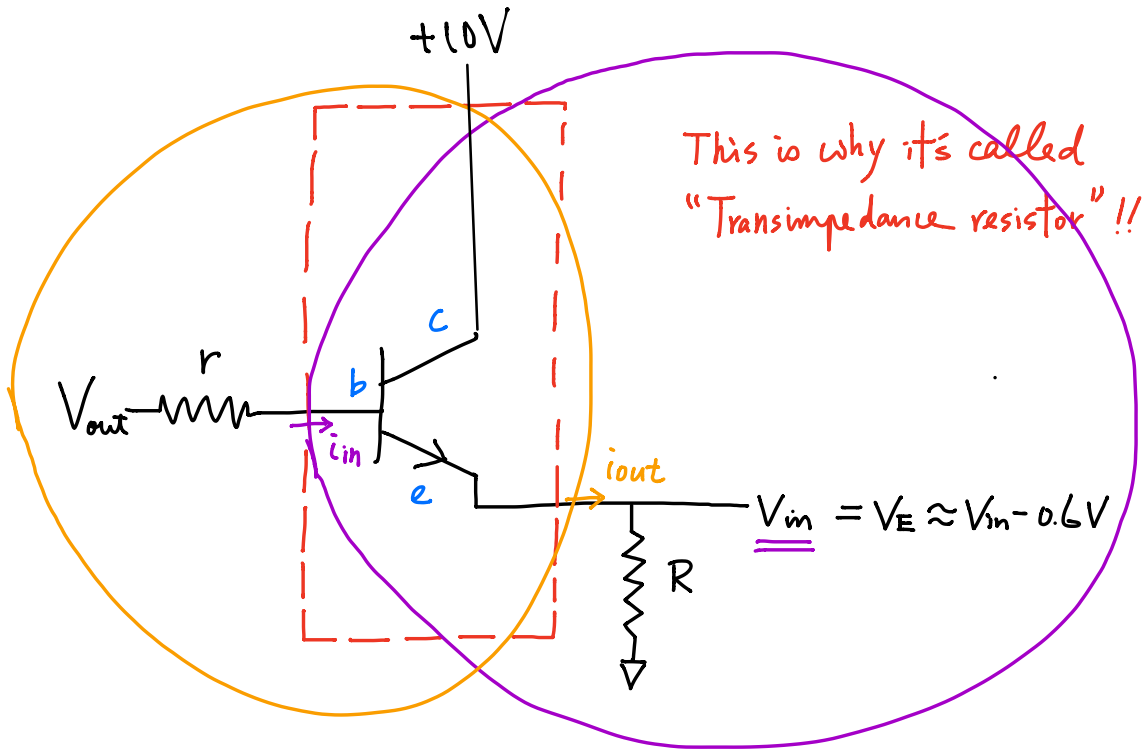

Impedance change: (look at the purple circle)

input impedance:

$$Z_{in} = \Delta V_{in} / \Delta I_{in}$$
$$= \Delta i_{out} R / \Delta i_{in}$$
$$= (\beta + 1) R$$

Reminder:

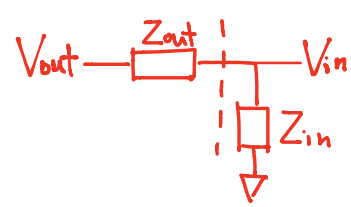

Input impedance improved by $(\beta+1)$!!

Reminder: the higher the input impedance the better.

Output impedance : look at the orange circle

$$Z_{out} = \Delta V_{out}/\Delta i_e = \Delta V_e/\Delta i_e$$
$$= \Delta V_b/(\beta+1)\Delta i_b$$
$$= r/(\beta+1)$$

Output impedance reduced by $(\beta+1)$.

A single transistor makes both input/output device happier by a factor of $\beta+1$.

Extension:

Darlington Pair:

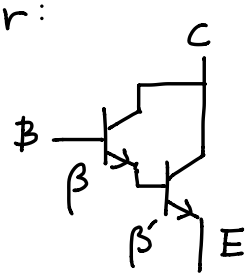

further improve current amplification to

$$\beta_{eff} = (1+\beta)(1+\beta')$$

Transistor as a current source

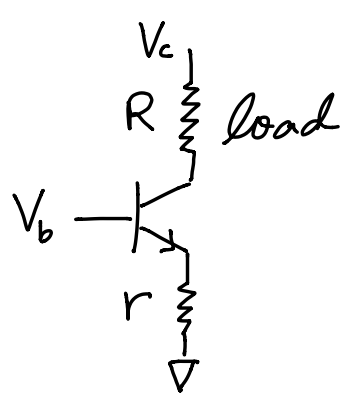

transistor on:

$$V_c = \beta i_b R + (\beta+1) i_b r$$
$$\Rightarrow i_c = \beta i_b \approx V_c/(R+r)$$
$$V_b > 0.6 + (\beta+1) i_b r$$
$$> 0.6 + V_c \, r/(R+r)$$

transistor off: $V < 0.6 + V_c \dfrac{r}{R+r}$

Transistor as an amplifier:

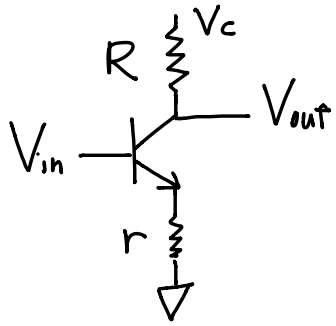

Working in the regime $i_c = \beta i_b$,

we have

$$V_{out} = V_c - i_c R$$
$$\approx V_c - i_e R$$
$$= V_c - \frac{V_{in} - 0.6}{r} R$$

What do we assume here?

AC gain

$$G_{AC} = \delta V_{out} / \delta V_{in}$$
$$= -\frac{R}{r}$$

Example: design a transistor amplifier with $G_{AC} = 10$ for a weak signal with a power supply 10V.

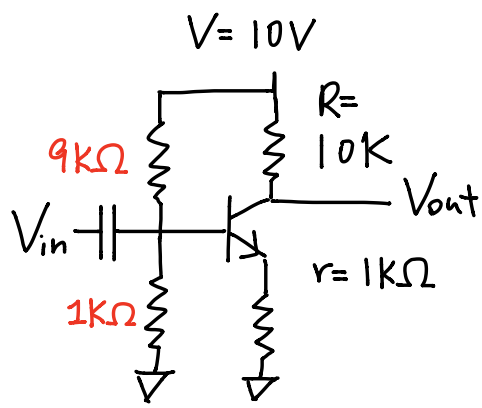

Step 1: make sure it can amplify.

$$\delta V_{out} = -R\,\delta i_c$$
$$= -R\,\delta i_e$$
$$= -R\,\delta V_{in}/r$$
$$= -\frac{R}{r}\delta V_{in} = -10\,\delta V_{in}$$

OK

Step 2: check the assumptions

$\delta i_c \approx \delta i_e$ fine

$\delta i_e = \delta V_{in}/r$ assumes what?

A. transistor is on $V_{be} = V_{in} - i_e r > 0.6 \Rightarrow V_{in} > 0.6 + i_e r$

B. V_{in} cannot be too large: transistor can only be completely on.

$$\Rightarrow i_e < \frac{V}{R+r} = 9\,mA$$

$$\Rightarrow V_{in} = 0.6 + i_e r < 0.6 + \frac{r}{R+r}V$$

Together we have $\quad 0.6 < V < 0.6 + \frac{1}{11} * 10 \approx 1.5$

So we should bias V_{in} by, say, 1V, and thus

$i_e = 0.4/1K = 0.4\,mA$, V_{out} is biased by 6V

$V_{out} = 6 - 10\,V_{in}$ #

A complete AC friendly circuit!

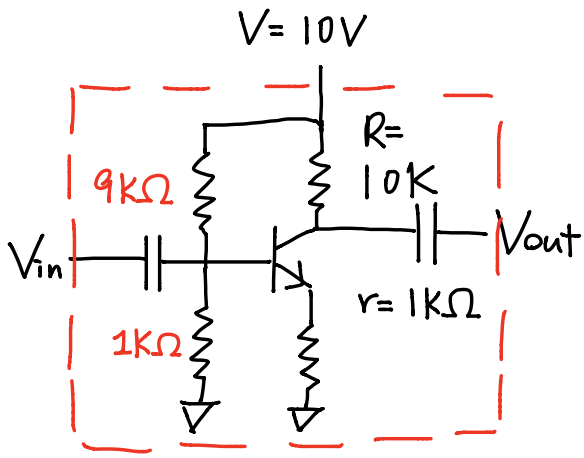

Our first non-trivial circuit!!